Circuit board modules AS-i, PCB solutions

AS-i OEM module, 4I/1O

for mounting in laser cutting head

Figure	Circuit board dimen-sions[1]	Inputs digital	Outputs digital	Inputs analog	Connection	Coated	LED status display[2]	Input voltage (sensor supply)[3]	Output voltage (actuator supply)[4]	AS-i address[5]	Art. no.
	20 mm x 62 mm	4	1	–	JST connector	no	yes	out of AUX	out of AUX	1 AB slave	**BW2963**

1 **Circuit board dimensions**: 4 holes for mounting ∅ 2,7 mm.

2 **LED status display**: status of in- and outputs is indicated by LEDs. In addition to that, both AS-i LEDs (PWR green and FAULT red) show as usual regarding the AS-i slaves- the status of the AS-i slaves.

3 **Input voltage (sensor supply):** inputs are supplied by AS-i or by AUX (auxiliary 24V power).

4 **Output voltage (actuator supply)**: outputs are supplied by AS-i or by AUX (auxiliary 24V power).

5 **AS-i address**: AB slave (max. 62 AB slaves/AS-i network).

Article no.	BW2963
Connection	
AS-i/peripheral connection	JST connector (see table below)
Length of connector cable	1,5 m
AS-i	
Profile, S-IO.ID.ID2	S-7.A.E, ID1 =7 (default)
Address	1 AB slave
Operating voltage	30V (18 ... 31,6V)
Required Master profile	≥M3
Since AS-i specification	2.1
Max. current consumption	20mA
AUX	
Voltage	24V (18 … 30V)
Max. current consumption	900mA
Inputs digital	
Number	4
Power supply	out of external 24V, 0,6W, connector etc. labeled on board
Power supply of attached sensors	max. 180mA each sensor, ∑ 720mA
Switching threshold	U_{in} < 2V low, U_{in} >10V high
Outputs digital	
Number	1
Power supply	out of external 24V, 0,6W, connector etc. labeled on board
Max. output current	150mA

Circuit board modules AS-i, PCB solutions

Article no.	BW2963
Display	
LED PWR (green)	on: AS-i power supply off: no AS-i power supply
LED FLT/FAULT (red)	on: error display communication error or address is 0 flashing: AUX voltage is missing off: no error
Inputs	
LED Lens 1 (IN1) (yellow)	on: lens 1 active off: lens 1 not active
LED Lens 2 (IN2) (yellow)	on: lens 2 active off: lens 2 not active
LED Cylinder (IN3) (yellow)	on: cylinder bolts retracted off: cylinder bolts extracted
LED Reserve (IN4) (yellow)	
Outputs	
LED Cylinder (yellow)	on: cylinder bolts extend active off: not extend cylinder
Environment	
Applied standards	EN 61 000-6-2 EN 61 000-6-3
Operating temperature	-25°C … +70°C
Storage temperature	-40°C … +85°C
Allowed shock and vibration stress	acceleration ≤ 15g, T ≤ 11ms, 10 … 55Hz, 0,5mm amplitude
Coating	–
Protection class EN 60529	IP00
Dimensions (W / H / D)	20 / 14,6 / 62

Programming	Bit setting digital I/O			
BW2963	**Slave 1**			
	D3	**D2**	**D1**	**D0**
	Input			
	I4	I3	I2	I1
	Output			
	–	–	–	O1
	Parameter bit			
	P3	P2	**P1**	P0
	not used			

Connections:	
AS-i +, AS-i -	Connection to the AS-i bus
E1 - E4 (I1 - I4)	Inputs
A1 (O1)	Output
+24V_in, 0V	Input for 24V power supply
nc (not connected)	not connected

Circuit board modules AS-i, PCB solutions

LED assignment and dimensional drawing	AS-i/peripheral connection	
BW2963		
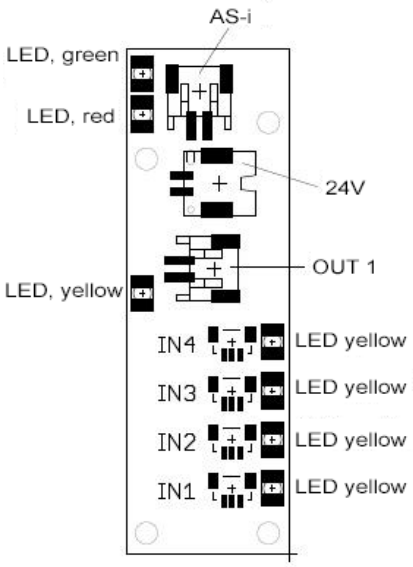		
		Connector type, Fa. JST
	IN 1, 2, 3, 4	**Typ SH, BM02B-SRSS-TB**
	OUT 1	**Typ PH, S2B-PH-SM4-TB**
	AS-i	**Typ PH, S2B-PH-SM4-TB**
	24V	**Typ PA, SM02B-PASS-TB**

Pin assignment for txasa1							
1. X5: AS-i connection		**2. X7: 24 V**		**3. X6: Output 1**			
1	AS-i+	1	24 V	1	OUT1 (24 V)		
2	AS-i-	2	0 V	2	0 V		
4. X1: Input 1		**5. X2: Input 2**		**6. X3: Input 3**		**7. X4: Input 4**	
1	24 V						
2	IN1...IN4						
3	0 V						