BIHL-WIEDEMANN.DE ▪ YEAR 14 ▪ EDITION 02.2020

AS-INTERFACE MASTER NEWS

THE BIHL+WIEDEMANN MAGAZINE

INTERVIEW

Bihl+Wiedemann: With ASi-5 in the passing lane

TECHNOLOGY

ASi-5
+ IO-Link
+ ASi Profile Cable
= Smart Networking

Efficient controller integration

Systematic drive solutions

Bihl + Wiedemann

Efficient controller integration

SYSTEMATIC DRIVE SOLUTIONS

Using various technology and communication platforms, functionally implementing custom- and application-specific requirements, reducing complexity and error risks, simplifying and consistently designing integration – Bihl+Wiedemann offers all this and more for drive technology based on ASi-5.

Countless sensors, switches, measuring devices, scanners, drives and control panels installed in complex systems or distributed over sometimes kilometer long material flow lines in large warehouses and distribution centers are a technological "El Dorado" for ASi-5, the new generation of AS-Interface. No other wiring technology allows such fast, wiring-efficient, flexible and topology-neutral connection of field devices – and thereby providing such cost-effective linkage, IT integration and automation.

Not only that – Bihl+Wiedemann also has a comprehensive ASI portfolio that offers more degrees of freedom especially when it comes to drive technology. For leading manufacturers of motorized roller drives such as Interroll, Itoh Denki or RULMECA it offers special ASi-5 motor modules. These enable 24 VDC and 48 VDC motors to be controlled directly over ASi without any additional control unit. In addition, the Mannheim-based company also offers motor modules for decentralized control of AC drives with and without a frequency converter like the

ASi-5: Intelligent integration of drives and smart field devices

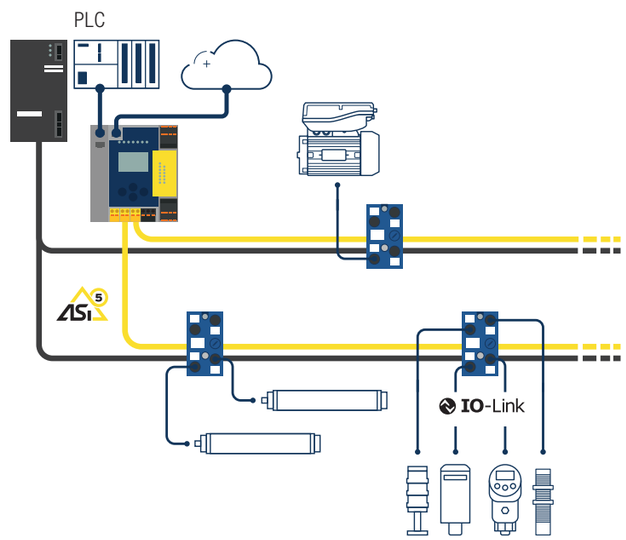

Application example: Passive safety

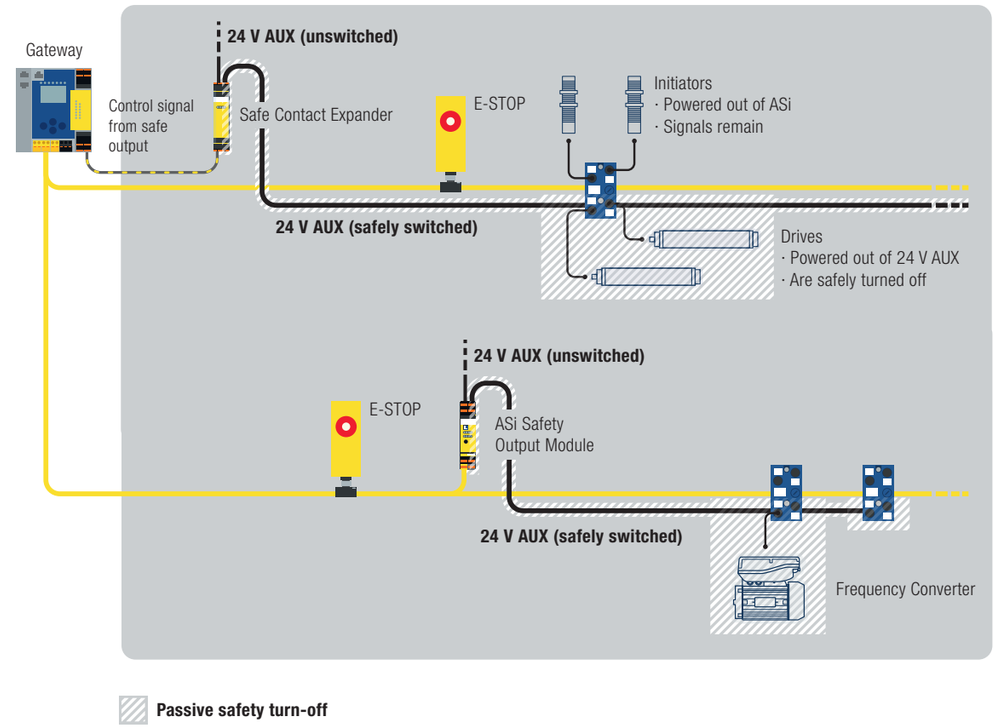

ones, for example, made by Lenze or SEW-EURODRIVE. Other manufacturers and drives can also be accommodated with corresponding ASi solutions from Bihl+Wiedemann on request. It makes no difference whether the interface is an analog or a serial protocol.

The new ASi-5/ASi-3 Gateways for fieldbuses such as PROFINET, EtherNet/IP, Sercos or EtherCAT also allow you to integrate with "Logistics 4.0". To make this possible, first of all, an OPC UA interface is built into the gateways. Secondly, the ASi-5 Modules with integrated IO-Link Master from Bihl+Wiedemann let you easily incorporate intelligent IO-Link sensors and actuators – including smart drives – into ASi-5 environments. The granular scalability of the connection modules, beginning with just a 1-port IO-Link master, also helps to reduce costs. The user invests only in the IO-Link ports that he actually needs. Even ASi Safety at Work is on-board, so that functional safety of conveying equipment can be fully realized as well.

Smart diagnostic and control possibilities for drive technology

The ASi-5 motor modules from Bihl+Wiedemann feature convenient and flexible control of drives as well as additional inputs for connecting the necessary sensors. The best part: the drives are powered via a separate AUX cable while the sensors get their power from the yellow ASi cable, which is additionally used for data transmission. This makes it possible to safely turn off the drives simply and cost-effectively just by turning off the AUX supply. The key concept here is passive safety, wherein the sensors can continue to be powered and monitored over ASi.

When it comes to the functionality and process optimization of drive solutions both in material handling and in complex machinery, being able to control braking and acceleration actions both travel and object based is critical. The motor modules from Bihl+Wiedemann allow you to cyclically write speeds and ramps with a resolution of 16 bits. This means users can set acceleration and braking for a specific object and, in the case of material

Dynamic acceleration parameters

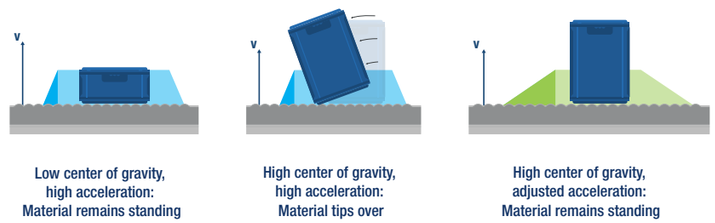

handling applications, take into account parameters such as weight, size, location, tipping risk of individual objects in the material flow control. The conveyed goods themselves can be tracked either centrally by the controller or remotely in material handling management using RFID for example.

Besides the separate supply for sensors and drives and the convenient, flexible control of the motors using cyclically changeable speeds and ramps, the motor modules also provide the detailed diagnostics typical for ASi-5 modules. In addition to short circuits in the sensor supply, errors in the drives can also be monitored. Depending on the drive, not only are diagnostics for overload or communication errors between ASi-5 module and drive possible, but also detailed information about the current conditions are available. These include such important variables as the current actual speed, motor current, motor temperature, or information about operating hours. All these diagnostics help to further optimize the availability and productivity of material handling systems, especially when the diagnostic data is made available via OPC UA to be used in predictive maintenance applications.

Simplifying and unifying integration

Ease of installation, high functionality and flexibility, low cost – this is how ASi has risen to the top as an internationally standardized wiring system for drive technology. The motor modules from Bihl+Wiedemann predominantly integrate multiple drives or motorized rollers, but they also offer additional sensor inputs. They enable the control of start-stop functions, rotation direction and speed, they allow simple setting of acceleration and deceleration ramps – and they are effortless to incorporate and start up using the software suites from Bihl+Wiedemann. This advantage over other multi-zone controllers for material handling becomes all the more significant the more drives need to be parameterized in the system – which depending on the vendor can be up to 200 parameters. If for example 400 roller drives need to be installed in a conveying system using specific 4-zone motor controllers, you have to assign each of the 100 modules its own IP address in order to parameterize it. Each individual module has to be connected to a webserver and the same parameterization executed 100 times in order to place the system in operation. With the motor modules from Bihl+Wiedemann and their software suites for simple and intuitive hardware configuration, addressing and startup of ASi networks, this effort is drastically reduced. The entire system requires just one IP address and just a single webserver – commissioning is correspondingly quick and simple.

Add to this the fact that the software suites from Bihl+Wiedemann support consistent uniform marking and identification of the process equipment within the drive system from the eCAD System of the electronics designer to the PLC programming portals such as TIA (Totally Integrated Automation) Portal from Siemens. Here the electronics planner can simply download an EPLAN macro from the Bihl+Wiedemann website and add the desired modules and the wiring for ASi, auxiliary power, I/O signals and parameters. The Bihl+Wiedemann

Comparison: Parameterization using ASi vs. other systems

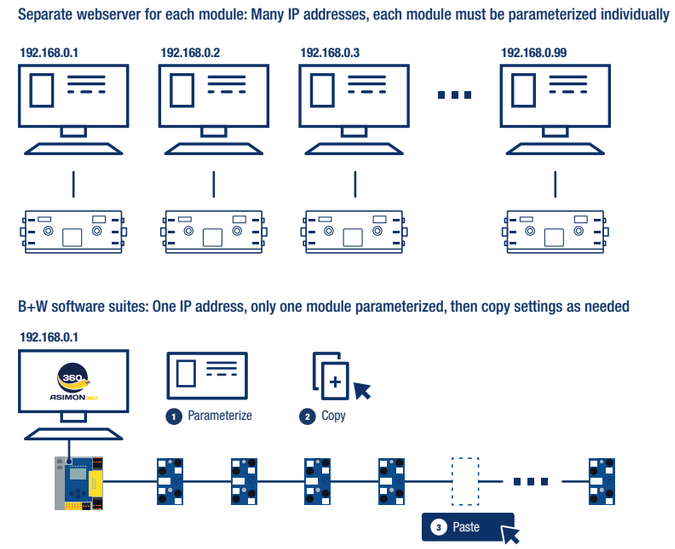

components are generally renamed, using a customer-specific syntax for descriptive names. This data is then exported to ASIMON360 for example, so that all the hardware and labeling prep-work of the electronics planner can be used in the software without duplicating any effort. The TIA Portal takes over the completed device configuration including all designations and addresses for modern symbolic PLC programming. This results in consistent uniform process equipment identification – namely because it is only performed once. It saves significant effort on additional work in ASIMON360 as well as in the TIA Portal, minimizes the risk of naming errors, and optionally enables automatic configuration of the components in the ASi network – which for many same I/O modules – like ASi-5 Modules with integrated IO-Link Master for the same IO-Link devices or ASi motor modules for the same drives – is extremely attractive for reasons of simplicity and time savings.

ASi-5 – making sure everything runs smoothly

As a wiring technology ASi-5 can capitalize fully on all its strengths in drive technology – including meeting the connectivity demands of Logistics 4.0. The comprehensive product range from Bihl+Wiedemann for this sector builds on this to offer many additional possibilities – for example, motor modules from other drive manufacturers can be added at any time. Using the bridge function of their software suites between the eCAD and TIA worlds, integrating drive technology in ASi environments is also made highly efficient.

And if that wasn't enough ...

Consistent uniform process equipment identification

Smart communication and power distribution for 48 V drive technology

BWU4212 Motor Module
for two 48 V motorized rollers

ASi-5 does not limit you to applications with 24 V motorized rollers. Bihl+Wiedemann now offers a solution for 48 V drive technology as well. One example is the BWU4212 ASi-5 Motor Module which lets you control two Interroll EC5000 AI (50W) 48 V drive units. The drives are powered from the new gray 48 V ASi profile cable, while power for the four digital inputs for connecting sensors is provided by ASi. Additionally, in a 48 V drive solution you can now integrate individual 24 V sensors to connect, for example, stack lights or switches in conveying applications – without having to route an additional 24 V AUX cable through the entire system. Here Bihl+Wiedemann offers 48 V / 24 V converters in the same compact 35 mm housing as their active and passive distributors. Available in various versions, these voltage converters are installed directly where they are needed to the corresponding sensor and to the gray profile cable using the familiar piercing technology.

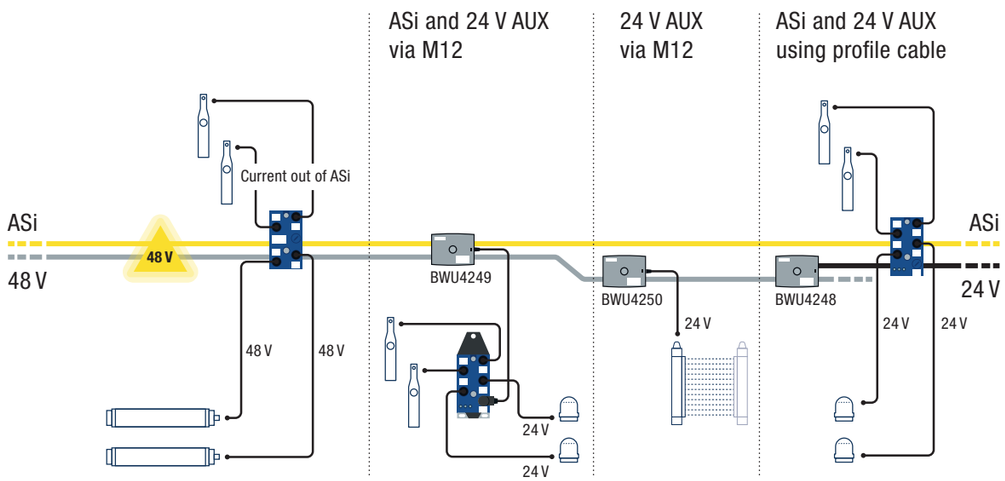

Integration of 24 V sensors in 48 V drive solutions

ASi-5 + IO-LINK + ASi PROFILE CABLE = SMART NETWORKING

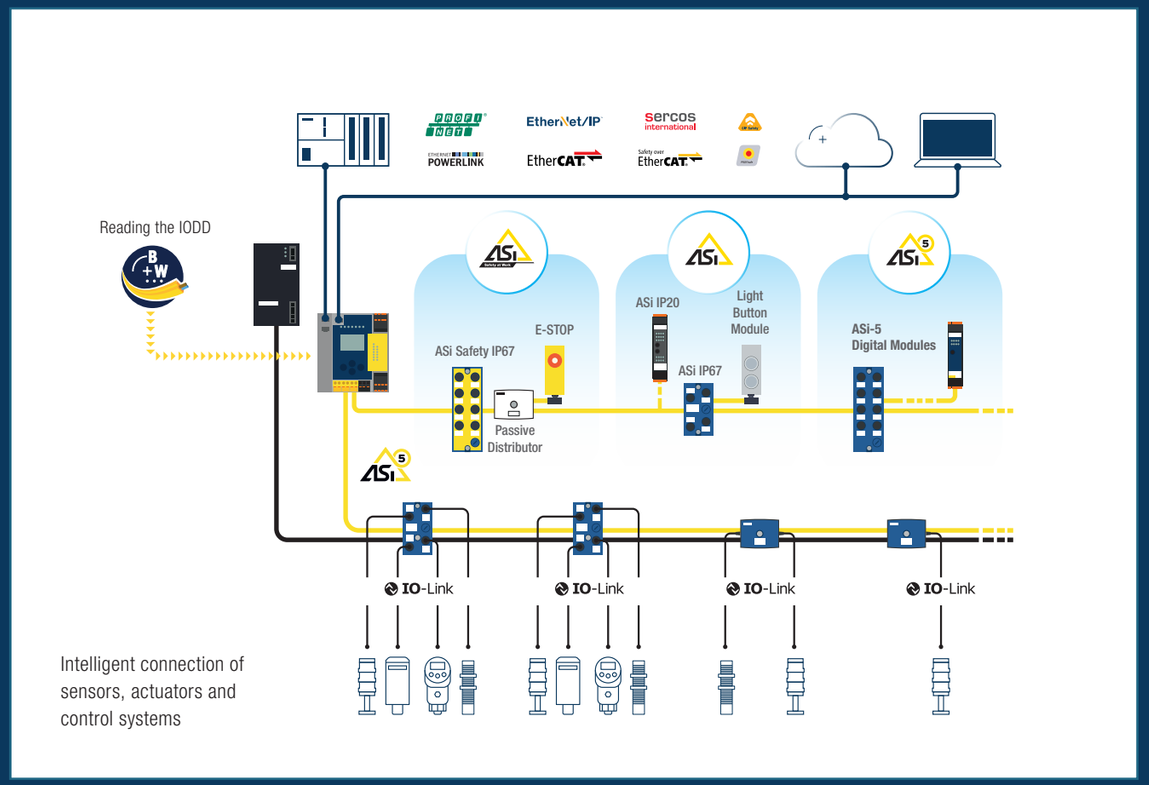

The digital future has long since begun in mechanical and plant engineering. ASi-5 as the globally standardized fieldbus for the first automation level and IO-Link as the fieldbus-neutral interface for uninterrupted communication with the field level are the technologies used for intelligent and efficient networking of sensors, actuators and control systems. They are also cost-effective – cutting wiring costs nearly in half thanks to the ASi profile cable.

Bihl+Wiedemann offers all the components you need for smart connection of sensors, actuators and control systems in the world of automation. These devices are technologically balanced to enable flexible response to the widest possible range of requirements while remaining economical.

ASi-5: Perfect communication with calculable savings

Technological innovations are considered successful when they lift previous barriers and open up new possibilities without adding excess cost that hinders or even prevents market entry. This all applies to ASi-5. The innovative fieldbus standard for the first automation level features short cycle times and high data bandwidth. ASi-5 lets you send large amounts of data at high speeds eliminating long silences caused by communication or the controller. Now not only can you handle high-dynamic applications with

ease, ASi-5 has also proven itself as the perfect wiring technology for smart field devices such as intelligent sensors and actuators with IO-Link interface. Safety is also an integral component of ASi-5. Safety-related, smart field devices use the same infrastructure as non-safety sensors and actuators. ASi-5 is even compatible with ASi-3: an important consideration for many machine and system builders. This means ASi-3 installations have not suddenly become outdated, since ASi-5 can be simply and cost-effectively added to upgrade the system.

Whether full-on ASi-5 or as an add-on, the Bihl+Wiedemann range always ensures the highest degree of calculable economy. One reason are the comparatively cost-effective components themselves. ASi-5 devices such as the ASi-5 Modules with integrated IO-Link Master for connecting IO-Link devices, or the self-configuring 16 I/O module BWU4230 with IP67 protection from Bihl+Wiedemann are generally less costly than Ethernet fieldbus modules or IO-Link hubs that are required in other solutions. In addition, Bihl+Wiedemann offers a granular range of products, beginning for example with a single-port IO-Link master. The user gets and pays for a connection module with only the features he actually needs. This makes ASi-5 not only transparent when it comes to communication, but also in terms of cost for each in- and output.

Security: ASi-5 requires just a single interface to TCP/IP

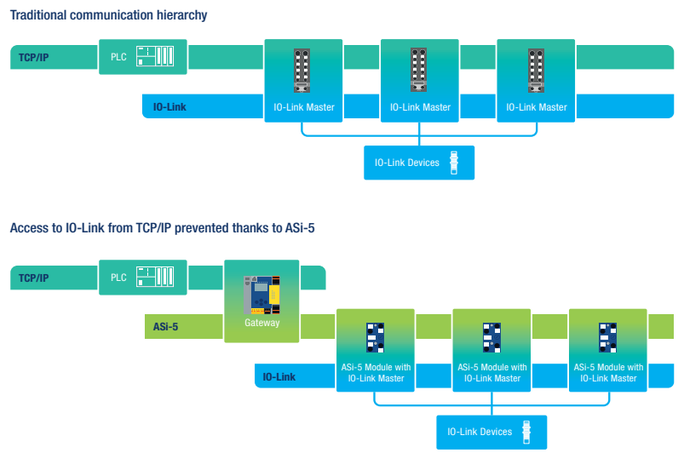

IO-Link: Dream partner for ASi-5 in machine digitalization

IO-Link is a fieldbus-neutral interface for efficient point-to-point integration of intelligent and communication-capable sensors and actuators. Incorporating such smart field devices can (still) generate nightmares in many scenarios such as when cable lengths are limited to just 20 meters or the expense of connecting a single device through an Ethernet-based fieldbus module with four or eight IO-Link ports. The combination of IO-Link and ASi-5 using the granular product range from Bihl+Wiedemann represents a dream pair for collecting IO-Link signals in the field. This is no coincidence, because the ability to retrieve data from intelligent devices with IO-Link more efficiently in the field and send it at high speed even in large data bandwidth was a key factor in the conception of ASi-5. ASi-5 and IO-Link is an ideal combination. Rather than competing, they instead complement each other perfectly. No longer does one need to tediously route Ethernet up to the machine. The only interface between the ASi application and TCP/IP is the ASi-5/ASi-3 Fieldbus Gateway – a huge benefit when it comes to security aspects as well. In addition to a webserver, OPC UA is included standard as a diagnostic channel – for direct communication of sensor data, measurement values or control variables to the cloud.

Cost comparison: Wiring with ASi profile cable vs. other fieldbus systems

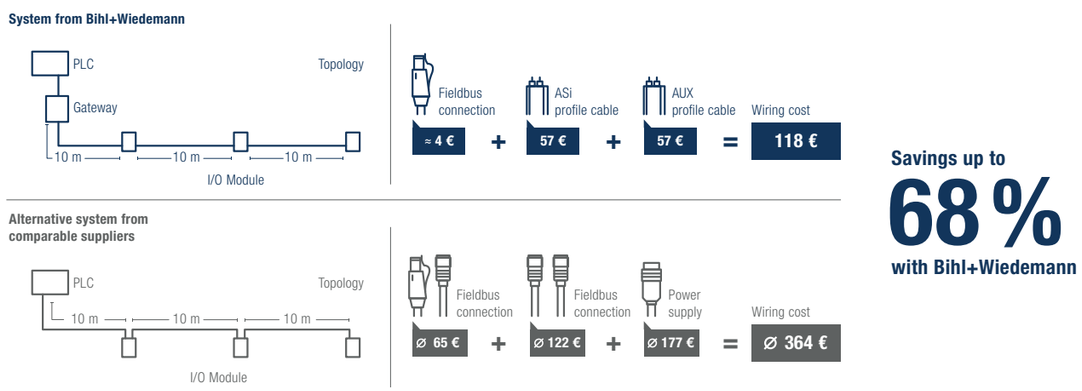

Aside from even all this – what makes IO-Link integration with Bihl+Wiedemann so special? One reason is the unique user experience. IO-Link devices can be inserted exactly where they are needed. And the ASi-5 Modules with integrated IO-Link Master let you connect devices from any manufacturer, thereby meeting the specifications of IEC 61131-9. The software suites from Bihl+Wiedemann make integration particularly simple – among other things thanks to the fast invoking of the IO Device Description (IODD) of the IO-Link devices, the graphical support in sensor parameterization, or the live view of installed devices, which lets you easily address ASi modules and IO-Link devices and also parameterize and monitor in- and outputs.

The convenient integration is one aspect, the cost side another. Here again IO-Link integration with Bihl+Wiedemann

Installing the IO-Link master using the software suites

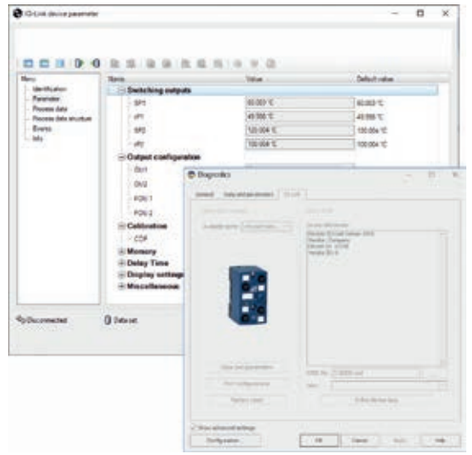

provides the answers. Significantly more IO-Link masters can be added per Ethernet node, and with many more IO-Link devices the integration costs per device are accordingly reduced. Switches and pre-assembled cables are also eliminated. Thanks to the OPC UA server integrated into the gateway there are no additional costs for cloud integration. The user invests only in as many IO-Link ports as he actually needs down to "lot size 1". Unused ports that cost your money are banished at Bihl+Wiedemann. Finally the wiring effort and expense: here also you enjoy the greatest cost-efficiency – thanks to

… ASi profile cable and integration-friendly piercing technology…

for every device. Exemplary cost comparisons show that wiring with ASi profile cables can be up to 70 percent less expensive than fieldbus-type round cable installation while also clearly providing more power. A superior technology with clear cost advantages: grist for the mill when considering ASi-5 and IO-Link smart-networked automation. There are many reasons for the savings benefits reaped by using ASi profile cable. Devices can be connected – with virtually no installation effort and with no risk of polarity reversal – to the unshielded, two-conductor cable precisely where they are needed. The connection is made using piercing technology without any need for different pre-assembled connection cables, connectors or tees. Each of the two conductors is reliably contacted at no fewer than two points. The topology – tree, ring, star or line topology – can be selected and changed without restrictions at any time. For applications where high-power IO-Link devices or power-intensive drive solutions need to be powered or the control signals need to be separated from the auxiliary power, special profile cables for supplying 24 V or 48 V are available which offer the same installation and cost advantages. ASi-5 as a data channel for integrating IO-Link is easy and incomparably economical to route in the field, thereby offering the perfect infrastructure for digitalized machines.

Bihl+Wiedemann – Solution provider for smart networking

Whether ASi-5, IO-Link or ASi profile

cable, whether know-how, development expertise or references – Bihl+Wiedemann offers machine and system builders everything they need for a successful move into the digital future. Without technological function or interface risks – but always with the promise to be a reliable innovation partner for the customer in meeting individual needs.

Simple wiring of valve terminals with ASi-5

In pneumatics a valve terminal is defined as the merging of multiple individual valves with central power and air supply. Linking to an automation system is often still cumbersome and expensive when using Ethernet nodes. A significantly more practical, cost-effective and efficient approach is to incorporate the variety of process and control valves or positioners using ASi-5. Regardless of the respective dimensioning, ASi-5 is perfectly scalable and the valve terminal can be configured in its entirely using just one IP address. This reduces startup times to a minimum.

Whether binary, analog or via IO-Link, Bihl+Wiedemann has the right integration module. Using ASi-5/ASi-3 Gateways with integrated OPC UA server as well as ASi-5 Modules with integrated IO-Link Master is the perfect response to increasing digitalization in factory and process automation. Smart diagnostic functions are increasingly in demand for valve terminals as well particularly when the automation scheme is complex or the highest possible level of operating safety of the overall system needs to be ensured.

Finesse and a secure grip with ASi-5

For robots to be able to securely handle small objects or those that often change in shape or size, their grippers and hands are becoming ever more sensitive, more articulated and flexible. This means that more and more miniaturized sensors and actuators need to be integrated into pneumatic or bionic gripping solutions. With ASi-5 and the 1-port IO-Link master in the compact format of the active distributors Bihl+Wiedemann offers the perfect wiring technology for automating the “sensory organs” and “muscles” of mechanical grippers and robot hands and for connecting them into the control system. The signals from the sensors and actuators of the gripper systems are collected and evaluated within a compact space and with high efficiency. At the same time, the flat ASi cable serves as the “nerve path” all the way to the “fingertips” to create perfect interaction between the signal generating sensors and the actuators when gripping. When intelligent sensors and actuators are used, they can also provide valuable information for condition monitoring of the gripper systems.

Interview with Sven Meister, Key Account Manager Automotive at Bihl+Wiedemann

Bihl+Wiedemann: With ASi-5 in the passing lane

Sven Meister, Key Account Manager Automotive at Bihl+Wiedemann.

Unit sales reaching five figures, used especially in the automobile industry but also in warehousing, material handling and in packaging systems, two years of system experience and a broad, granular product range – ASi-5 is already a technological success story at Bihl+Wiedemann. It’s finding more and more adherents in the market – also for connecting IO-Link devices. AS-Interface News interviews Sven Meister, Key Account Manager Automotive at Bihl+Wiedemann.

ASi MASTER NEWS: Now that the new ASi-5 standard has been introduced, this fieldbus for the first automation level is no longer seen as a niche concept but rather has established itself as a technology for a wide range of applications. What do you attribute this positive development to?

Sven Meister: ASi-5 creates the prerequisites for future-proof automation because it can send large quantities of data at high speed. Users have long wanted a clear performance and function leap, but it has taken all this time to master the difficult technical challenges. ASi-5 also offers all the options for efficient integration of intelligent sensors like the ones increasingly being installed in high-performance machines. The best way to explain it might be by using an example from telecommunications. First there was analog telephony, which transmitted language in the original frequency band. Then came – over the same cable, usable simultaneously and without mutual interference – DSL. In our case analog telephony is ASi-3, which communicates at a frequency of 167 kHz. ASi-5, our equivalent to DSL, uses the frequency range from 1 to 10 MHz. Here there are a variety of carrier frequencies available for sending up to 384 in- and 384 output bits in 1.27 ms using so-called orthogonal frequency multiplexing with triple redundancy, whereby the master determines the best functioning carrier in coordination with the individual modules. This solution not only ensures that ASi-3 and ASi-5 can be used in parallel within the same infrastructure. In all modesty I believe we can see ASi-5 – together with our other products - as a kind of synthesis of the arts which gives the user a simple wiring technology that also offers many benefits in terms of automation technology.

ASi MASTER NEWS: What are these benefits, and what are some of the practical advantages?

Sven Meister: What’s significant for many applications are the already mentioned features high speed and large data bandwidth. Up to 32 bytes of process data per device can be sent cyclically. This means ASi-5 also lets you transport data, for example, from RFID readers and bar code scanners. Transmission of color images is now also possible with ASi-5, for example for the content of displays or for electronic signs in the context of paperless warehousing or commissioning. Other practical advantages pertain to planners, designers, installers and service personnel. The piercing technology and freedom of topology make it possible to implement even complex projects cost-effectively. No large connectors are needed for connecting devices, and the installer has no need to deal with connecting wires in the field. Connection now becomes space-saving and economical. It could hardly be faster or easier. The same applies to addressing of modules, at least with Bihl+Wiedemann. All the devices are now simply numbered in order. You can do this either with a portable address programming device or use our ASIMON360 configuration software. The PC software doesn’t even limit

you to all the settings for the modules connected in the respective ASi networks. It also features an interface to circuit diagram programs like EPLAN, which lets you use all the already-done work of the electrical planner with respect to hardware and identification in the software. In addition, ASIMON360 provides all the necessary data types for the data image in the host controller. And if an error occurs, the controller then automatically identifies the defective component. Then it's just a matter of plug-and-play to replace it, with ASi-5 taking over parameterization of the replacement.

ASi MASTER NEWS: When you look at it that way, the costs for gateways, modules or other components seem to be almost incidental …

Sven Meister: Actually no. Of course the hardware for ASi-5 is also subject to financial considerations. But that is only one of many cost aspects that contribute to the cost-efficiency of ASi-5. We could take the automobile industry as an example, where the accountants really start sharpening their pencils when it comes to plant investment. In Germany alone there are several thousand Bihl+Wiedemann ASi-5 modules in service in that industry. The decision makers recognized that with ASi-5 we are not offering a system that is expensive to maintain, but rather a fail-safe wiring and automation solution that greatly simplifies handling and maintenance compared with the current standard in the industry. The critical factors there are the simplicity and speed with which any faults or errors can be detected and eliminated. This helps to prevent production stoppages and downtime expenses. Against this background you can see the decision to use ASi-5 as quite an accolade on the part of the automobile industry. With its much more diagnostic-capable wiring technology, AS-Interface has now made full and impressive use of its second opportunity. Of course our interest in offering ASi-5 components with a fair price-performance ratio is not limited to the automobile industry, but rather to existing and potential customers as well. For example, our range includes ASi-5 modules with 1-port, 2-port and 4-port IO-Link masters which enable individually scalable solutions under the heading "Buy by the port and pay only for what you actually need." The performance level of the system puts us in a league with Ethernet-based fieldbus systems, where we can also reduce the handling effort and provide cost advantages thanks to the less complicated technology.

ASi MASTER NEWS: Although ASi-5 is still relatively new, Bihl+Wiedemann appears to be already well and broadly established. Is that a fair assessment?

Sven Meister: That is an accurate view, and there are two reasons for it. Firstly, we became involved early on and with great intensity with the development group of AS-International, which had a significant impact on the development of ASi-5 into a new fieldbus standard for the first automation level. We learned a great deal through this involvement. Secondly, AS-Interface is the quasi DNA of our company. We are not coming from the sensor or controller world, rather we have been developing, producing and marketing wiring technology from the very beginning – though of course a very special one. With an eye on the earliest possible market entry we began to develop the first hardware devices in line in parallel with the emerging technical specifications of ASi-5. We carried out field testing on them quite early and gained much practical experience with various drive and automation systems. In the process we learned much about stable data communication, possible error sources and diagnostic approaches which in turn resulted in optimization of transmission properties and transmission methods as applied to our devices. With our products it is possible to make full use of the entire bandwidth of ASi-5 on an individual level, for example, to send certain data faster and other data slower or less often. Transmission configurations such as these are stored in our ASi-5 modules as profiles. We also took a look at what hardware users require. In addition to collecting IO-Link device signals, flexibility in the use of in- and outputs is becoming ever more important. Accordingly, we developed the BWU4230, a self-configuring module which can provide up to 16 in- or outputs as required.

ASi MASTER NEWS: Where does standardization end and flexibility and individualization begin? What about compatibility?

Sven Meister: Good questions. By using ASICs which map the specified transmission mechanisms, the ASi-5 system is perfectly designed with respect to compatibility of different devices from various manufacturers. Everyone is on equal footing, but at the same time, as a manufacturer Bihl+Wiedemann can have a positive influence on customer- or application-specific system performance through intelligent use of methods for setting the transmission parameters – optimized for the respective topology characteristics in the background – or through intelligently configurable hardware quasi in the foreground. With our products, we have considered ASi-5 technology as the carrier level and we have put in place elegant, application-oriented and sometimes individualized hardware solutions and user interfaces. ASi-5 is still ASi-5 and of course retains maximum compatibility, but at Bihl+Wiedemann we offer so much more.

ASi MASTER NEWS: You've mentioned application orientation and called out the automobile industry. Which other sectors in your view ought to be considering ASi-5?

Sven Meister: Basically, ASi-5 should be of interest to any machine or system builder who needs to collect many signals in the field, accomplish it in a technically and economically practical way, and who at the same time is open to smart automation with intelligent sensors and actuators. Not only directly in the field, the devices can also find flexible use in control cabinets or switch boxes. There the efficient wiring aspect of AS-Interface remains of benefit in the ASi-5 generation as well of course.

ASi MASTER NEWS: Mr. Meister, thank you for the discussion.

ASi-5 AND ASi NEWS FROM BIHL+WIEDEMANN

Product Family "ASi-5 Self-configuring I/O Modules":

- ✓ ASi-5 Digital I/O Module with self-configuring connections
- ✓ 16 digital signals can be arranged as desired as in- or outputs, i.e. up to 16 digital in- or rather outputs possible
- ✓ Channel-specific diagnostics
- ✓ In- and output voltage out of AUX
- ✓ Connection of periphery via 8 x M12 females, 5-pin
- ✓ Connection of ASi:
  - Using profile cable and piercing techology (BWU4230)
  - Using M12 plugs (BWU4231)
- ✓ 1 ASi-5 address
- ✓ Protection rating IP67

Addition to the product family – soon available from us: **ASi-5 Self-configuring I/O Module, IP67, M12, 8I/O (BWU4232)**

Voltage converter 48 V / 24 V:

- ✓ Flat form factor, can be installed in cable duct (installation depth > 35 mm)
- ✓ Protection rating IP67
- ✓ Output current 1 A
- ✓ LED status display

BWU4248:
- Connections for 1 x AUX: 48 V profile cable to 1 x AUX 24 V profile cable
- Input voltage AUX: 48 VDC
- Output voltage AUX: 24 VDC

BWU4249:
- Connections for 1 x ASi and 1 x AUX: 48 V profile cable to 1 x M12 cable socket, right-angle, 5-pin for ASi and AUX 24 V
- Cable length 1 m
- Input voltage ASi: 30 VDC, input voltage AUX: 48 VDC
- Output voltage ASi: 30 VDC, output voltage AUX: 24 VDC

BWU4250:
- Connections for 1 x AUX: 48 V profile cable to1 x M12 cable socket, right-angle, 5-pin, for AUX: 24 V
- Input voltage AUX: 48 VDC
- Output voltage AUX: 24 VDC

Accessories

ASi profile cable 48 V (BWU4243):
- ASi profile cable for additional auxiliary power 48 V
- Conductor cross-section 2.5 mm²
- Tinned copper leads
- Conductor insulation PP
- Jacket material PUR (gray)

ASi-5/ASi-3 Fieldbus Gateways

✓ ASi-5 Master and (most powerful) ASi-3 Master in one device
✓ Field update ability for anti-tampering firmware and security updates
✓ OPC UA server for Industry 4.0 applications
✓ Integrated webserver for fast system diagnostics
✓ Cyber security with strict load tests and end-to-end encryption

ASi-5/ASi-3 Fieldbus Gateways without Safety Technology

Article	Fieldbus	Number of ASi networks	1 power supply, 1 gateway for 2 ASi networks, inexpensive power supplies
BWU3847	PROFINET	1	yes, 4A/ASi network
BWU3852	PROFINET	2	yes, 4A/ASi network
BWU3848	PROFINET	1	yes, 8A/ASi network
BWU3849	EtherNet/IP+Modbus TCP	1	yes, 4A/ASi network
BWU3851	EtherNet/IP+Modbus TCP	2	yes, 4A/ASi network
BWU4019	EtherNet/IP+Modbus TCP	1	yes, 8A/ASi network
BWU3854	EtherCAT	1	yes, 4A/ASi network
BWU4016	POWERLINK	1	yes, 4A/ASi network

ASi-5/ASi-3 Fieldbus Gateways with Safety Technology

				Safety Fieldbus	Local I/Os[1]
BWU3674	PROFINET	2	yes, 4A/ASi network	PROFIsafe	✓
BWU3862	PROFINET	1	yes, 4A/ASi network	PROFIsafe	✓
BWU4000	PROFINET	2	yes, 4A/ASi network	–	✓
BWU3863	PROFINET	1	yes, 4A/ASi network	–	✓
BWU3998	PROFINET	1	yes, 4A/ASi network	–	–
BWU3857	EtherNet/IP+Modbus TCP	2	yes, 4A/ASi network	CIP Safety	✓
BWU3825	EtherNet/IP+Modbus TCP	2	yes, 4A/ASi network	–	✓
BWU3866	EtherNet/IP+Modbus TCP	1	yes, 4A/ASi network	–	✓
BWU3861	SERCOS	2	yes, 4A/ASi network	Safety for Schneider drives	✓
BWU3860	SERCOS	2	yes, 4A/ASi network	CIP Safety	✓
BWU3845	SERCOS	2	yes, 4A/ASi network	CIP Safety	–
BWU3858	EtherCAT	2	yes, 4A/ASi network	FSoE	✓
BWU3991	EtherCAT	1	yes, 4A/ASi network	–	–

[1] All gateways with local I/Os can be set as desired. For example, up to 6 standard inputs or rather up to 3 x 2-channel safe inputs and up to 6 safe outputs can be configured. These can be used for safe speed/standstill monitoring.

ASi-5 Modules with integrated IO-Link Master

✓ Comfortable parameter setting using Bihl+Wiedemann software suites
✓ In 1.27 ms up to 4 x 16 bit user data available
✓ Up to 32 bytes cyclical process data
✓ Supply of IO-Link ports out of AUX

Article	Type	Number of IO-Link ports	IO-Link Port Class A	IO-Link Port Class B	Connection of ASi	Connection of periphery	Protection rating
BWU4067	Field module	4	2 x	2 x	Profile cable	4 x M12 socket (5-pin)	IP67
BWU3897	Field module	4	2 x	2 x	M12	4 x M12 socket (5-pin)	IP67
BWU3819	Field module	4	4 x	–	Profile cable	4 x M12 socket (5-pin)	IP67
BWU3899	Field module	4	4 x	–	M12	4 x M12 socket (5-pin)	IP67
BWU4077	Active distributor	2	1 x	1 x	Profile cable	2 x M12 socket (straight, 5-pin)	IP67
BWU4088	Active distributor	1	–	1 x	Profile cable	2 x M12 socket (straight, 5-pin)	IP67
BWU3843	Cabinet module	4	Configurable terminals		6 x COMBICON	6 x COMBICON	IP20

BWU4211: Small Starter Set ASi-5 / IO-Link with ASi-5 PROFINET Gateway BWU3847, ASi-5 Module with integrated IO-Link Master BWU4067 and B+W Suite BW2902
BWU4229: Small Starter Set ASi-5 / IO-Link with ASi-5 EtherNet/IP+Modbus TCP Gateway BWU3849, ASi-5 Module with integrated IO-Link Master BWU4067 and B+W Suite BW2902

ASi Safety I/O Module, IP20, 6SI/2SO/2EDM (BWU3883)
■ 6 x 2-channel safe inputs (SIL 3, Cat. 4) for ✓ floating contacts ✓ optoelectronic protective devices ✓ antivalent switches ✓ adjustable test pulse width ■ 2 release circuits (2 x fast electronic safe outputs) ■ 2 x EDM (feedback circuit for protection control) ■ 6 x COMBICON terminals ■ In- and output voltage out of AUX ■ Connection of periphery via clamp terminals, no length restriction for the connection cable (loop resistance 150Ω) ■ Connection of ASi via clamp terminals ■ ASi addresses depending on configuration, optimized for ASIMON360 ■ Protection rating IP20

Active Distributor ASi Safety, IP67, 1SI (BWU4701):

■ 1 x 2-channel safe input (SIL 3, Cat. 4) for floating contacts ■ Input voltage out of ASi ■ Connection of periphery via 1 x M12 cable socket, straight, 5-pin ■ Cable length 2 m ■ Especially flat form factor, can be installed in cable duct ■ Connection for 1 x ASi profile cable ■ Connection of ASi using profile cable ■ 1 single address ■ Protection rating IP67

Active Distributor ASi, Motor Module for Lenze Smart Motor, IP67, 4I/3O (BWU3787):

■ Active Distributor ASi, Motor Module for 1 x Lenze Smart Motor ■ 4 digital inputs ■ 3 digital outputs ■ In- and output voltage out of AUX ■ Connection of periphery via 4 x M12 cable sockets, straight, 5-pin ■ Cable length 2 m ■ Especially flat form factor, can be installed in cable duct ■ LED status display ■ Connection of ASi using profile cable ■ 1 AB address ■ Protection rating IP67

IMPRINT

Publisher
Bihl+Wiedemann GmbH
Flosswoerthstrasse 41
D-68199 Mannheim
Phone: +49 (621) 339960
Fax: +49 (621) 3392239
info@bihl-wiedemann.de
www.bihl-wiedemann.de

Created by
MILANO medien GmbH
Hanauer Landstraße 196A
D-60314 Frankfurt am Main
Phone: +49 (69) 48000540
Fax: +49 (69) 48000549
info@milanomedien.com
www.milanomedien.com

Edited by:
Dirk Heyden,
Thomas Rönitzsch

ASi-5

AUTOMATION REINVENTED.

YOUR PATH INTO THE DIGITAL FUTURE.

IO-Link

Bihl + Wiedemann

www.bihl-wiedemann.com