New passive distributors AUX 16 A / 20 A

The new AUX passive distributors (BW3306, BW3307) from Bihl+Wiedemann in very flat design (W x H x D: 60 x 45 x 19 mm) permit **transmissions of up to 20 A**. Above all they offer not only variable connection to the AS-i network, but also the highest possible **degree of flexibility in systems planning**.

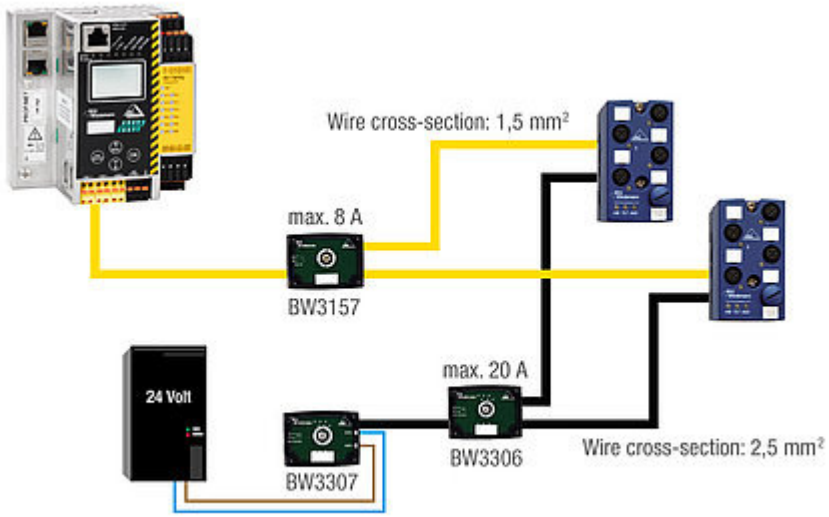

Fig. 1: New Passive Distributors AUX 16 A / 20 A (BW3306, BW3307) and Passive Distributor AS-i 8A (BW3157)

Available with:

- 2 x round cable / connection leads 2.5 mm² for powering from AUX (24 V auxiliary power) (BW3307)
- 2 x connections for profile cables AUX as profile cable branch (BW3306)

Benefits of the new AUX passive distributors with up to 20 A in detail:

- Extremely flat design (W x H x D: 60 x 45 x 19 mm)
- High protection rating IP67
- Gold-plated contacts
- Up to 16 A / 20 A possible, depending on black AUX flat cable used
- Maximum flexibility in system design

© 2016 Bihl+Wiedemann GmbH, Mannheim - Germany